6. Reproduce the drawing of the **rugby ball** shown across, using a **trammel** to draw the **ellipse**.

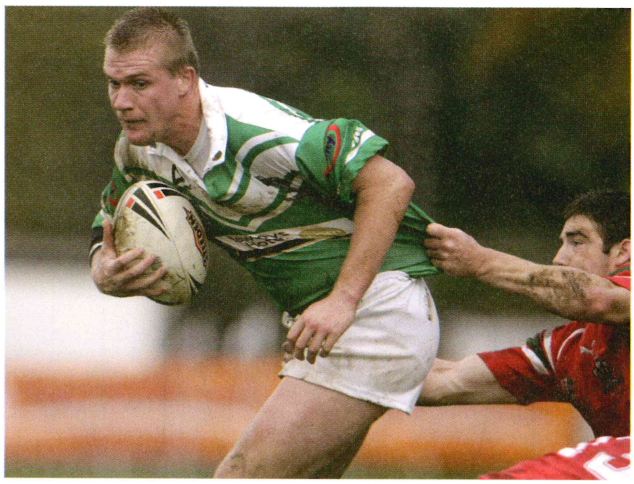

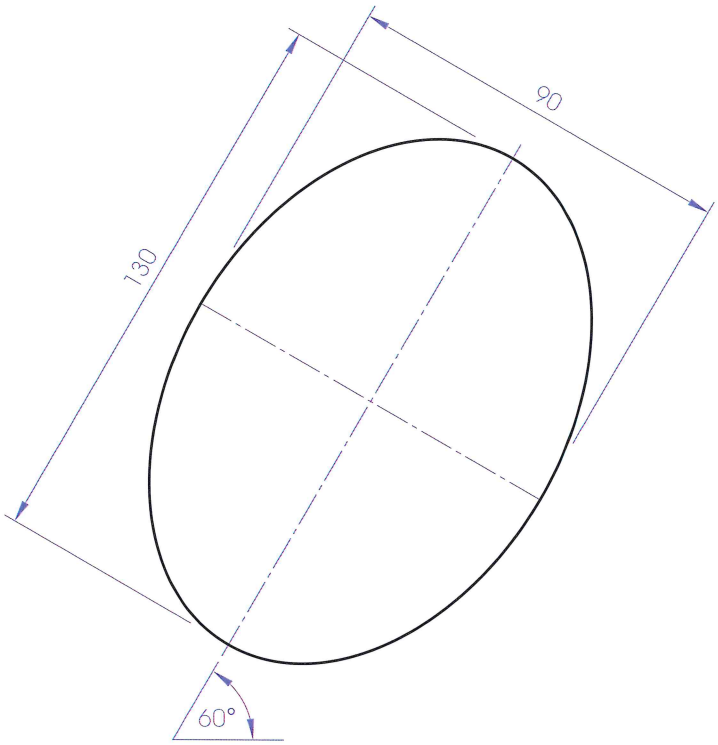

Drawing an Ellipse using the Rectangle Method

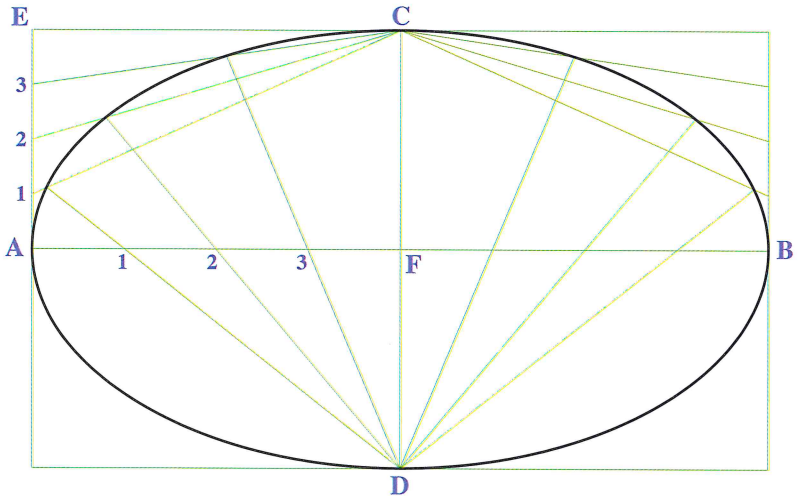

1. Draw the major and minor axes AB and CD, and draw a rectangle about their ends.
2. Divide AE and AF into the same number of equal parts, say four. Number the divisions from A as shown.
3. Join the points on AE to C. Join D to the points on AF and extend as shown.
4. The points where corresponding lines intersect are points on the curve.
5. Repeat in the other quadrants of the rectangle. Join the points of intersection of corresponding lines in a smooth curve.

Answer Worksheet 12B

Drawing a Tangent and a Normal to an Ellipse at a Point P on the Curve

A **tangent** to an ellipse is a line that touches the curve at one point called the **point of contact**.

A **normal** is a line drawn perpendicular to the tangent at the point of contact.

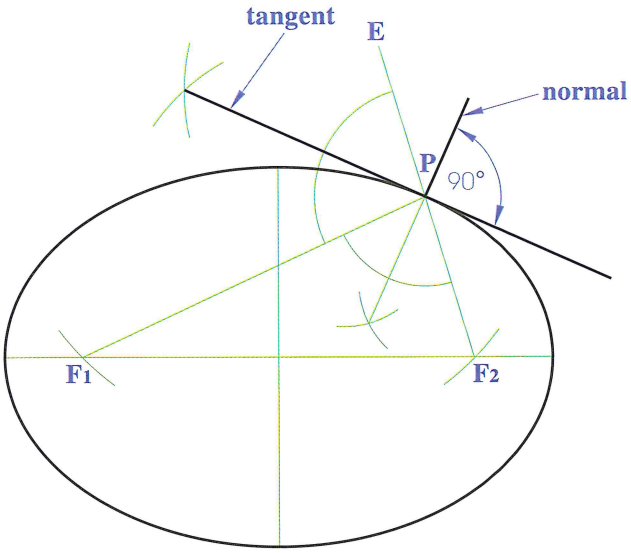

1. Determine the focal points. Join P to F_1 and F_2 respectively.
2. Extend F_2P to E and bisect the angle F_1PE. The bisector of this angle is the required **tangent**.
3. Bisect the angle F_1PF_2. The bisector of this angle is the required **normal**.

The point of intersection between the ellipse and the tangent is called the **point of contact**.

A **normal** bisects the angle formed by the two lines drawn from the point of contact to the focal points.

Answer Worksheet 12C

Exercises

1. The figure below shows a design based on a **fish**. The curve is based on an **ellipse** with a **major axis** of 140 mm and a **minor axis** of 90 mm.

   F is one of the **focal points** of the curve. The line AB is a **tangent** to the ellipse at the point A.

   Draw the given figure showing all construction lines.

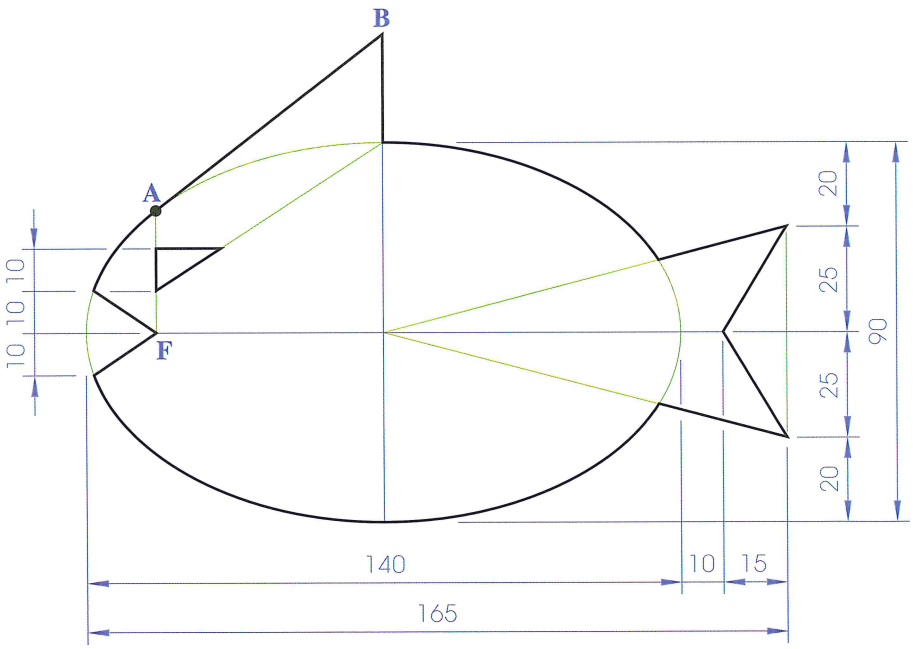

2. The figure below represents a **picture frame** for a photograph that is hanging on a wall. It is based on an **ellipse** having a **major axis** of 120 mm and a **minor axis** of 80 mm.

The lines PT and QT are **tangents** to the ellipse at the points P and Q respectively.

Draw the figure to the dimensions given showing all constructions clearly.

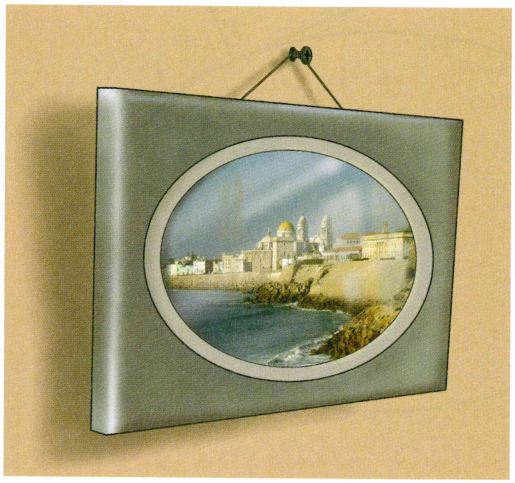

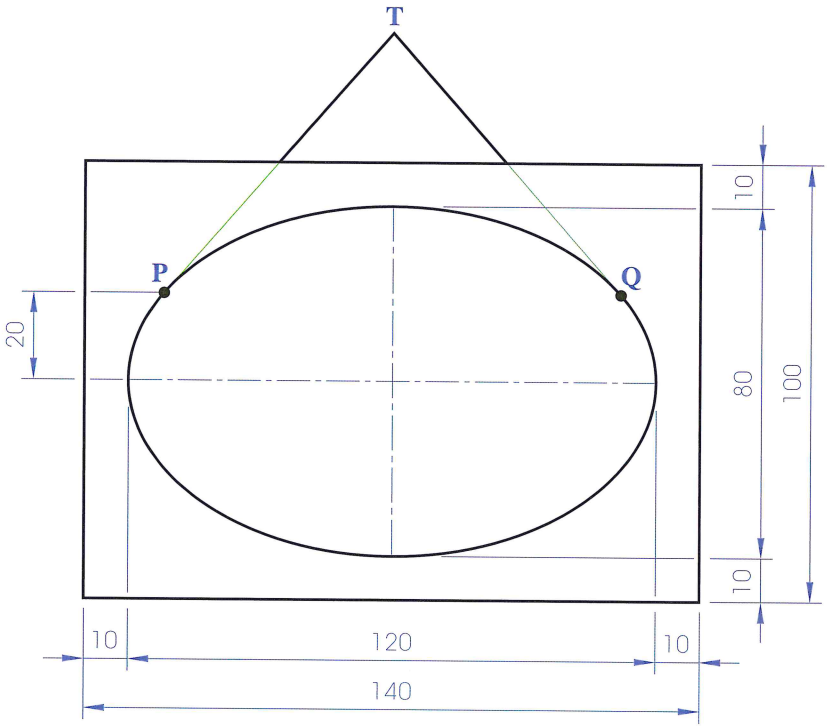

3. The figure below represents a **steering wheel** for a **computer game**. It is based on an **ellipse** having a **major axis** of 120 mm and a **minor axis** of 90 mm.

The line AB is a **normal** to the curve at the point A.

Draw the figure showing all constructions.