Chapter 21

The Ellipse and Parabola

The **ellipse** and **parabola** may be combined in the drawing of many designs. In this chapter, we will look at some typical examples. The first example is the **Sydney Harbour Bridge**.

Example

Shown below is a drawing of the **Sydney Harbour Bridge**. The main arch of the bridge is in the form of a portion ABC of an **ellipse** having a **semi-major axis** of length 150 mm and a **focal point** F.
The second arch is a **parabola** DEF having its vertex at E. The vertical cables are equally spaced.
Draw the given figure showing all constructions.

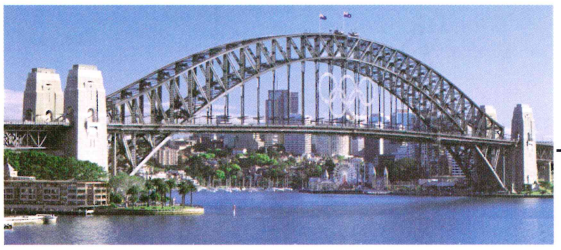

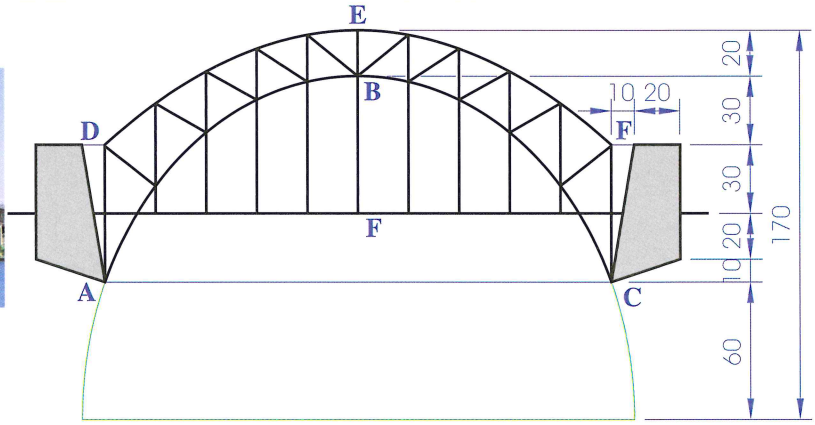

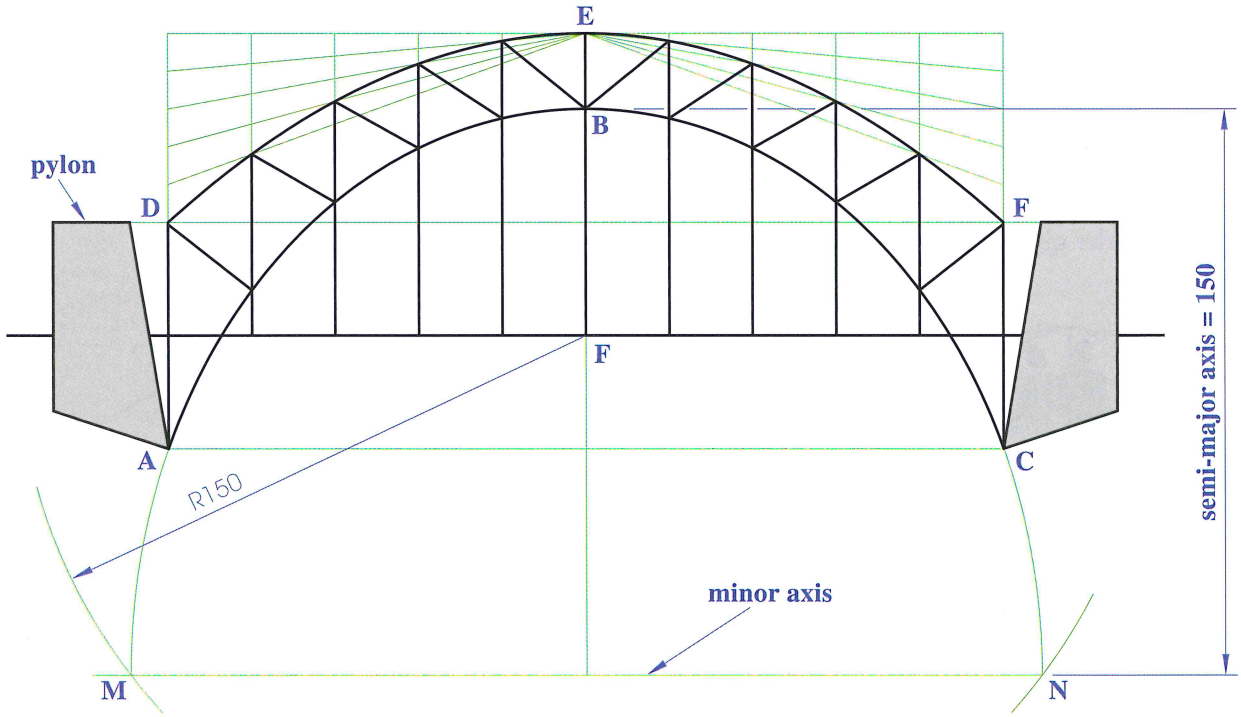

1. Draw the semi-major axis of length 150 mm and locate the focal point F. Draw the direction of the minor axis. With centre F and radius 150 mm (half the major axis), swing arcs to locate the points M and N. MN is the minor axis. Draw the portion ABC of the ellipse.
2. Draw the two pylons to the given sizes.
3. Locate the points D, E and F and draw the rectangle to enclose the parabola DEF. Draw the parabola using the construction outlined on page 165. Complete the outline of the design.

Exercises

1. The figure shows a design based on a **fish**. The curve ABCDE is based on an **ellipse** with **major axis** 130 mm and a **focal point** F. The line BP is **tangential** to the ellipse at point B.

The curve QDR is based on a **parabola** with vertex D.

Draw the given figure showing all construction lines.

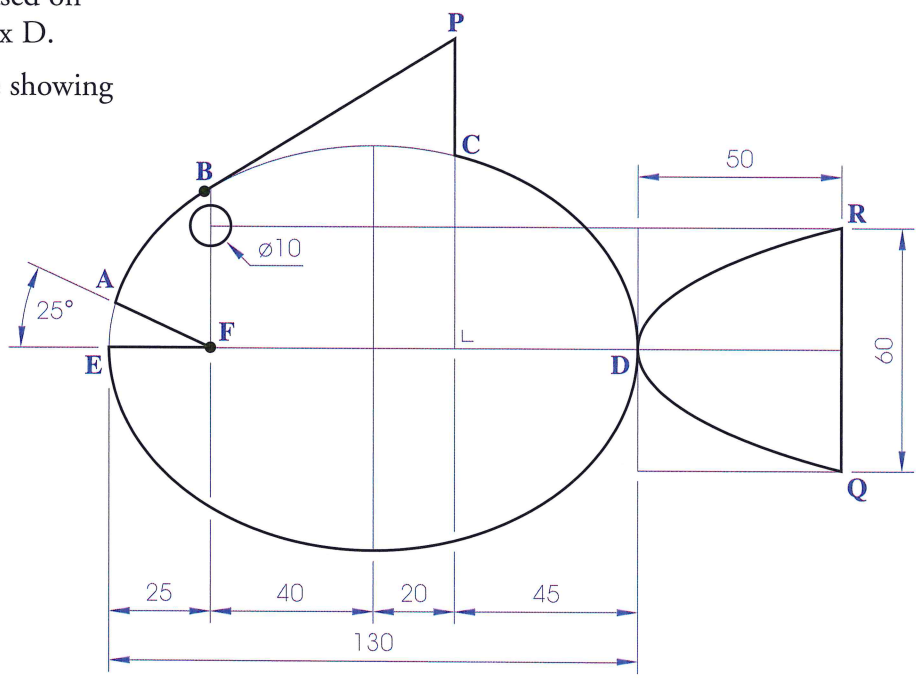

2. Shown below (left) is a photograph of the logo for the **Credit Union of Ireland**. A drawing of part of this logo is shown in the figure (right). The curve ABCD is based on an **ellipse** with **major axis** 180 mm and **focal points** F_1 and F_2.

The curves BV_1D and BV_2D are based on the same parabola with the vertices located at V_1 and V_2 respectively.

Reproduce the given drawing full-size showing all construction lines.

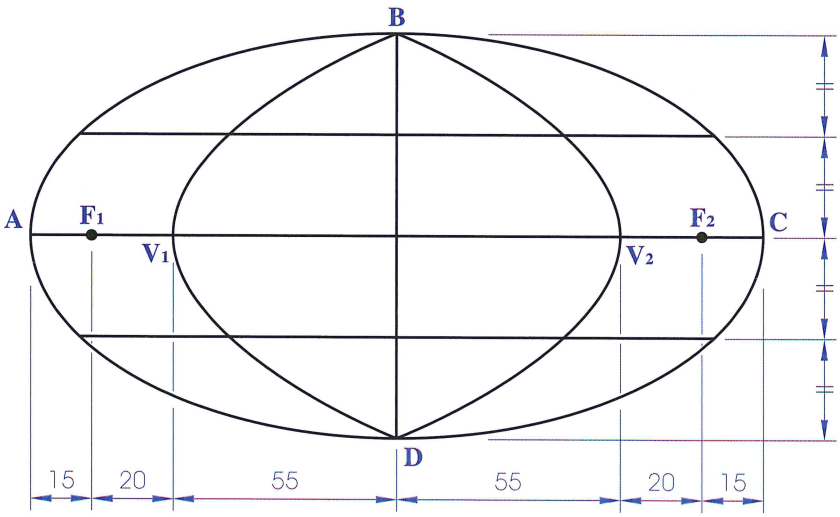

3. The figure across represents a **wine glass**. The curve ABC is based on an **ellipse** with **major axis** 130 mm long and a **focal point** F.

The curve JKL is based on a **parabola** with vertex K.

Draw the given figure full-size showing all constructions clearly.

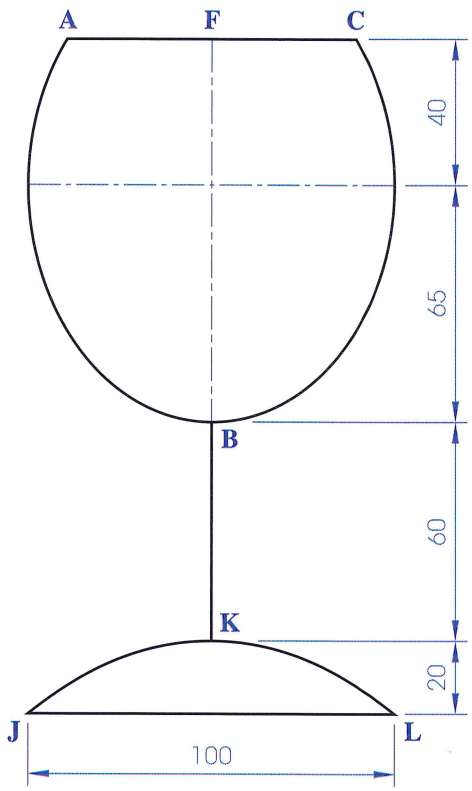

4. The figure shows a design based on the elevation of a **lamp**. The curve ABCD is based on an **ellipse** with **major axis** 150 mm and **minor axis** 80 mm. The **focal points** E and F are indicated.

The line AT is a **tangent** to the ellipse at A. The curve GAH is based on a **parabola** with vertex A.

Draw the design showing all construction lines.

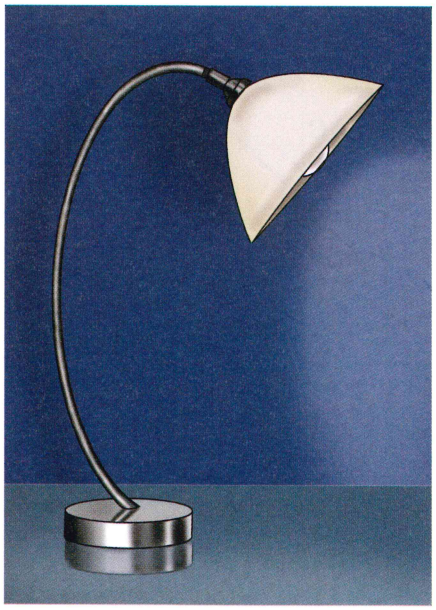

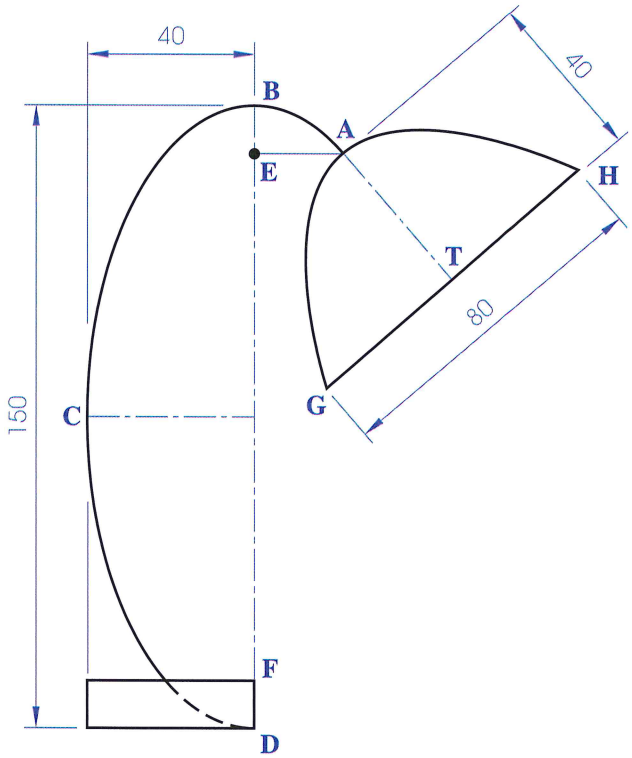

More Problems on the Ellipse

Example

The line MN is the **major axis** of an **ellipse** and P is a point on the curve. Construct the ellipse.

1. Bisect MN to get C, the centre of the ellipse. Draw the major auxiliary circle.
2. Through P, draw a line perpendicular to the major axis to locate D. Join D to C.
3. Through P, draw a line parallel to the major axis to locate E on the line CD.
4. CE is the radius of the minor auxiliary circle.
5. Construct the ellipse using the auxiliary circles method.

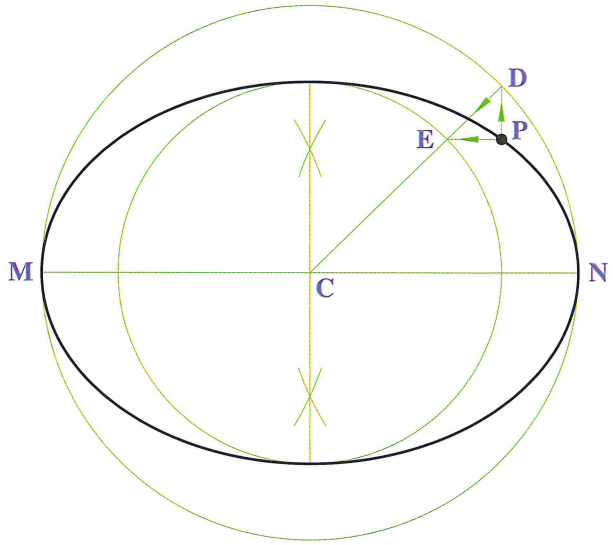

The solution involves a reversal of the auxiliary circles method.

Alternative Solution

1. Bisect MN to get C, the centre of the ellipse. Draw the position of the minor axis.
2. Make a trammel and mark points P and B where PB equals half the length of the major axis.
3. Place the trammel so that P is at the point P and B is on the minor axis.
4. Point A may be marked where the trammel crosses the major axis. Then PA equals half the minor axis.
5. Mark the minor axis and draw the ellipse.

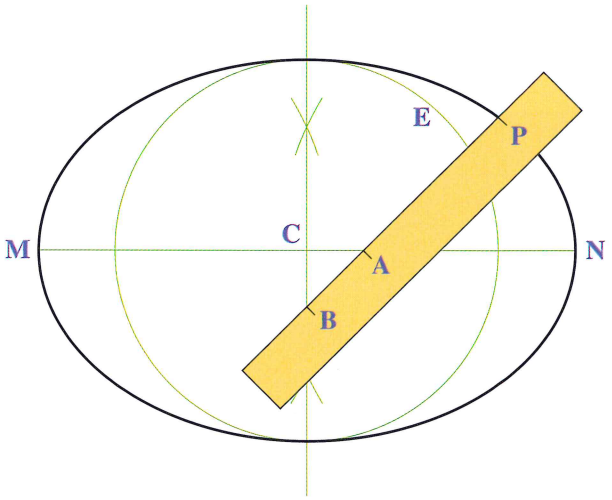

The solution involves a reversal of the trammel method.

Answer Worksheet 21A

Example

The figure represents a two-button **computer mouse** and **cable**.

The curve ABCD is an **ellipse** with **major axis** 120 mm long.

The curves QA and QR are based on the same **semi-parabola** with the vertex at Q for each parabola.

Draw the figure to the dimensions given showing all constructions clearly.

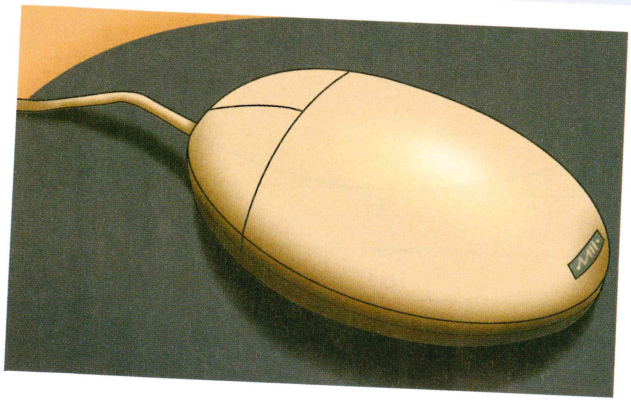

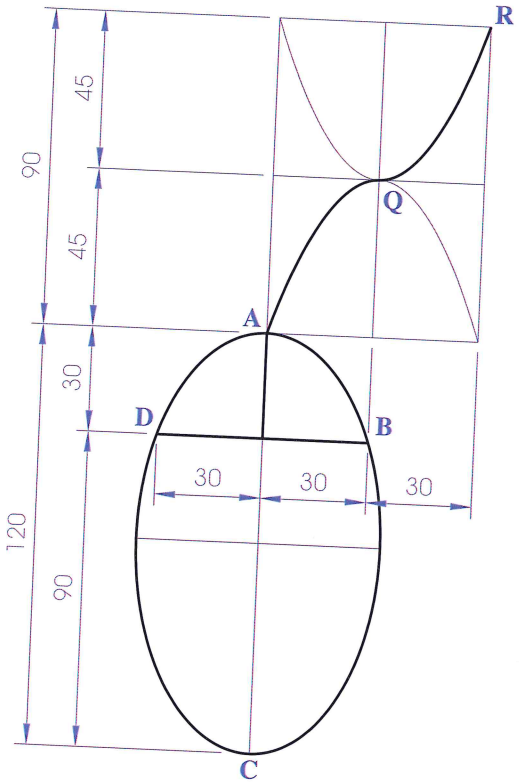

1. Draw the rectangles measuring 45 mm × 30 mm as shown to enclose the semi-parabolas QA and QR. Use the method outlined on page 165 to draw the two curves.
2. Draw the major axis AC of length 120 mm and locate the line DB. Locate E, the centre of the ellipse, and draw the major auxiliary circle of radius 60 mm.
3. D is a point on the curve. Through D, draw a line perpendicular to the major axis to locate F. Join F to E.
4. Through D, draw a line parallel to the major axis to locate G on the line FE. With centre E and radius equal to the length of EG, draw the minor auxiliary circle
5. Construct the ellipse using the auxiliary circles method.

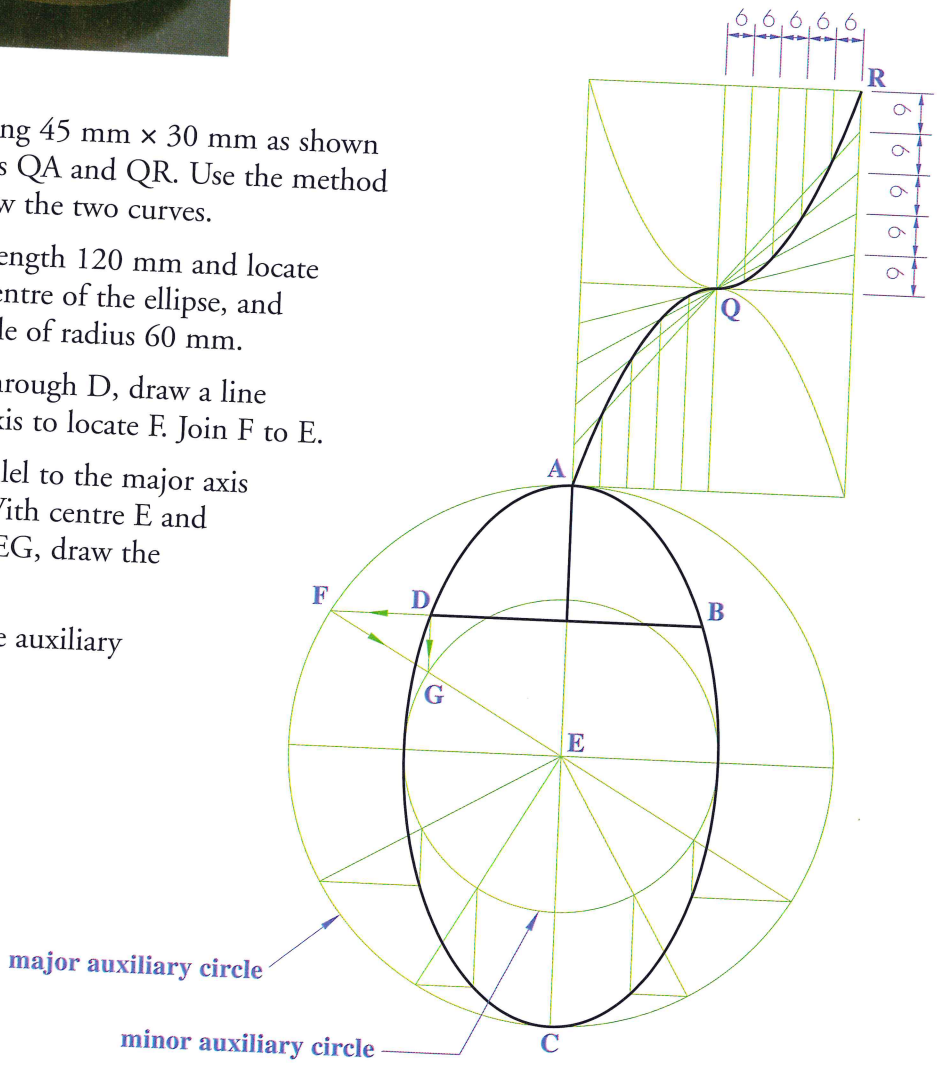

Exercises

1. The figure across shows a drawing of the **Star Trek** emblem. The curve ABCDE is based on an **ellipse** with **major axis** 150 mm.

   The curves PQR and PSR are **parabolas** with vertices at Q and S respectively.

   Draw the figure to the given dimensions showing all construction lines.

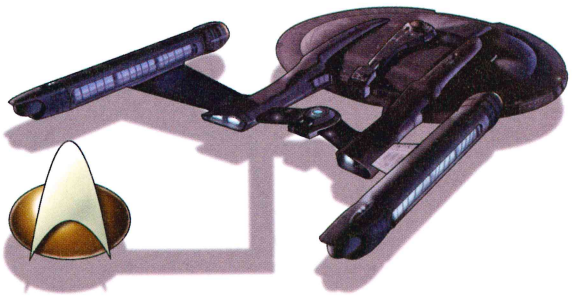

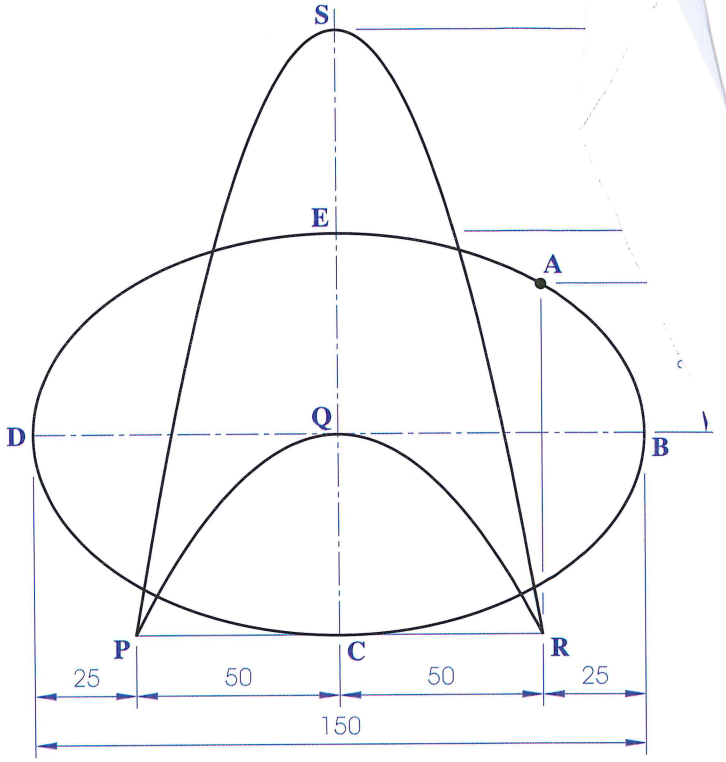

2. The figure below represents the outline elevation of a **stadium**. The curve ABC is a **semi-ellipse** with **minor axis** 120 mm.

   The curves DEF and D_1E_1F are based on the same parabola with vertices located at E and E_1 respectively.

   Draw the outline of the building showing all constructions clearly.

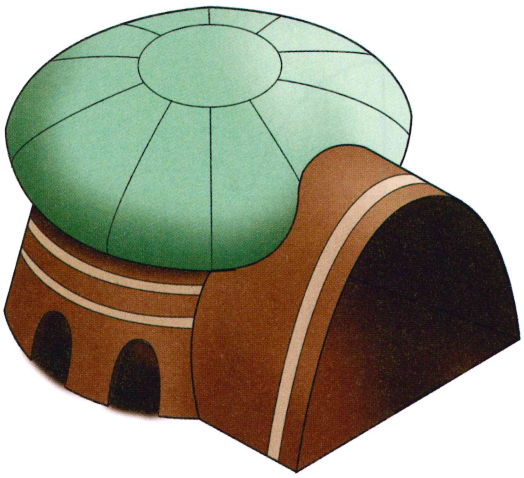

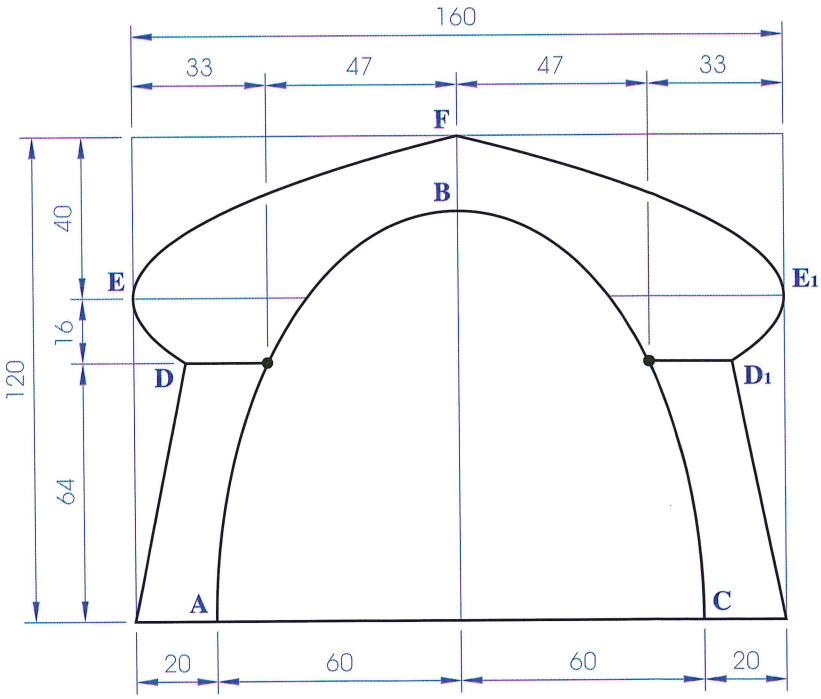

3. A drawing of the **Kawasaki** logo is shown in the figure below. The curves DEF and GHI are based on the same **ellipse** with **minor axis** 50 mm.

The curves AB and AC are **semi-parabolas** with vertices located at B and C respectively.

Reproduce the drawing of the logo showing all construction lines clearly.

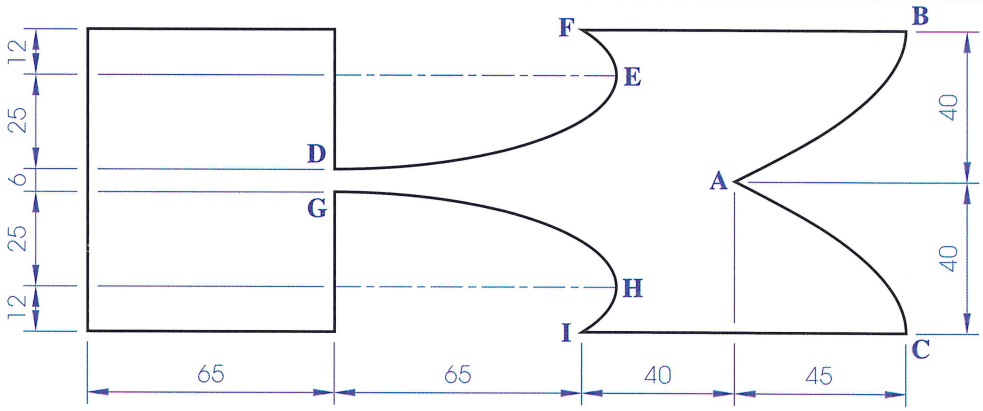

4. A drawing of the **Atlantic Homecare** trademark is shown below. A portion of an **ellipse** and a p have been linked together in the formation of the letter A.

The curve ABC is based on an **ellipse** with **minor axis** 80 mm and the curve AC is a **parabola** with vertex A.

Reproduce the drawing of this trademark.