2. The elevation and plan are drawn as shown below.

3. The development can be drawn directly from the elevation and plan as all edges of the prism appear in true length in at least one of these views.

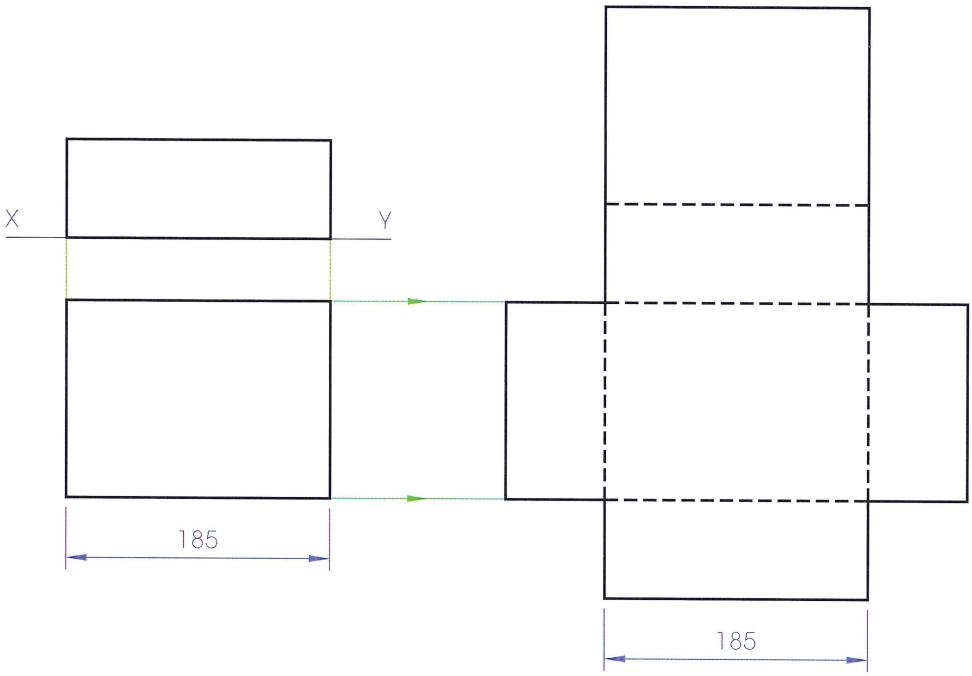

Dashed lines are used in a development to indicate lines along which folds are to occur.

Exercise

The **Chicken McNuggets** box shown below is based on a rectangular prism with dimensions as indicated.

(a) Draw an **elevation** of the prism looking in the direction of arrow **A**.

(b) Draw a **plan** of the prism looking in the direction of the arrow **B**, projected from the elevation.

(c) Draw a **surface development** of the prism.

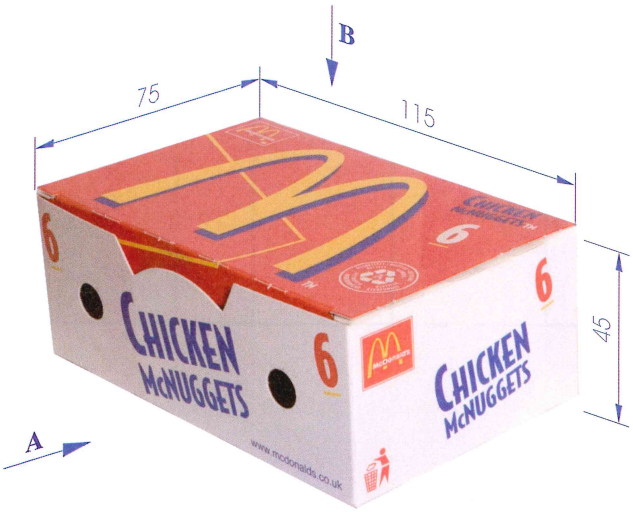

Example

The figure over shows a pictorial view of a prism, which is based on the **Scots Clan** box.

(a) Draw an **elevation** of the prism looking in the direction of arrow **A**.

(b) Draw a **plan** of the prism projected from the elevation.

(c) Draw a **surface development** of the prism.

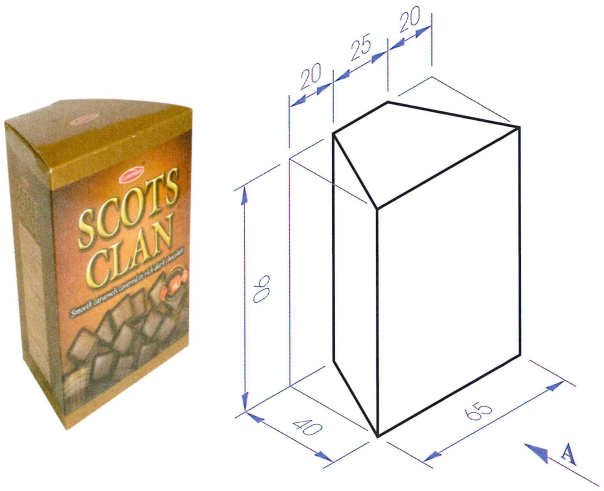

1. The figure below illustrates the faces of the prism unfolding into one plane. The development consists of four rectangles and two trapeziums.

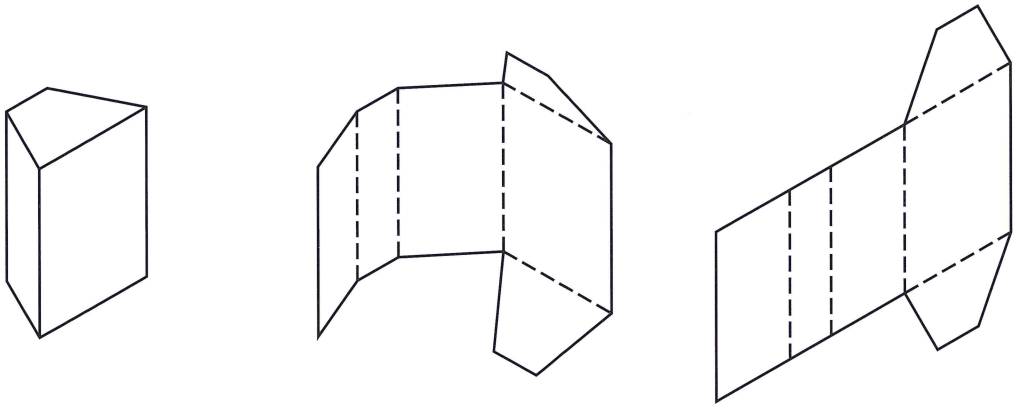

2. The elevation and plan are drawn as shown below.

3. The development can be drawn by transferring the relevant true lengths from the elevation and plan as indicated below.

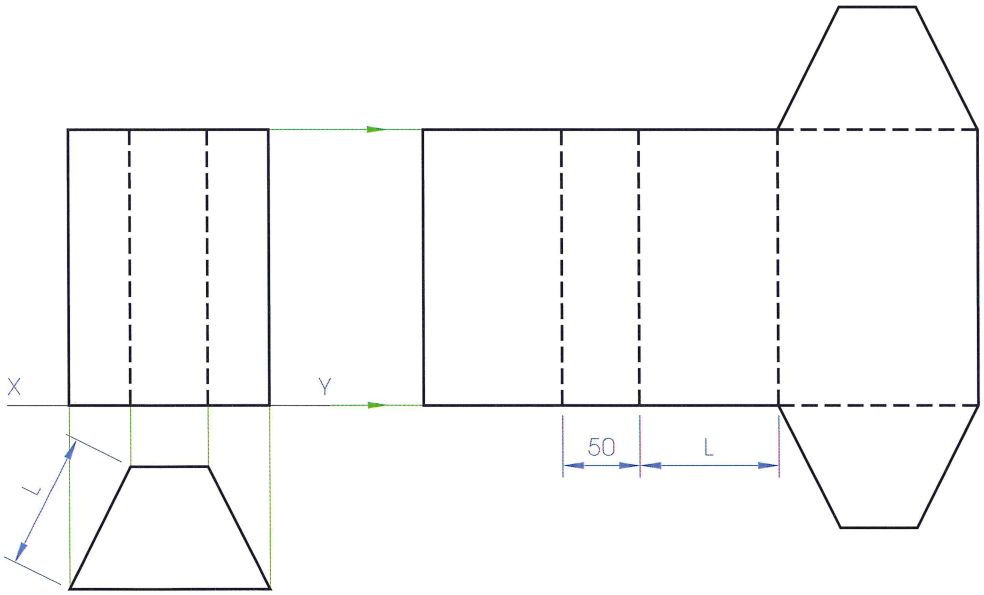

Exercises

1. The **Band-Aid®** box shown over is based on a **rectangular prism** with dimensions as indicated.

(a) Draw an **elevation** of the prism looking in the direction of arrow **A**.

(b) Draw a **plan** of the prism looking in the direction of the arrow **B**, projected from the elevation.

(c) Draw a **surface development** of the prism.

2. The **Amicelli** box shown across is based on a **regular hexagonal prism**. Using the dimensions shown:

(a) Draw an **elevation** of the prism looking in the direction of arrow **A**.

(b) Draw a **plan** of the prism looking in the direction of the arrow **B**, projected from the elevation.

(c) Draw a **surface development** of the prism.

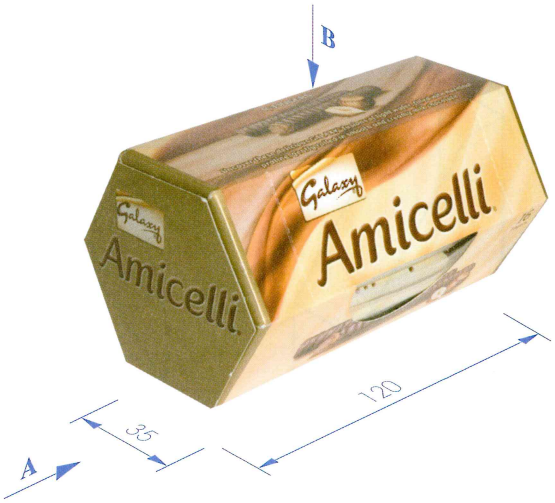

3. The **Walnut Whip** box shown across is based on an **equilateral triangular prism**. Using the dimensions indicated:

(a) Draw an **elevation** of the prism looking in the direction of arrow **A**.

(b) Draw a **plan** of the prism looking in the direction of the arrow **B**, projected from the elevation.

(c) Draw a **surface development** of the prism.

Example

A pictorial view of a **truncated prism**, which is based on the **R-kive** box, is shown over.

(a) Draw a **front elevation** of the truncated prism looking in the direction of arrow **A**.

(b) Draw an **end elevation** looking in the direction of the arrow **B**.

(c) Draw a **development** of the truncated prism.

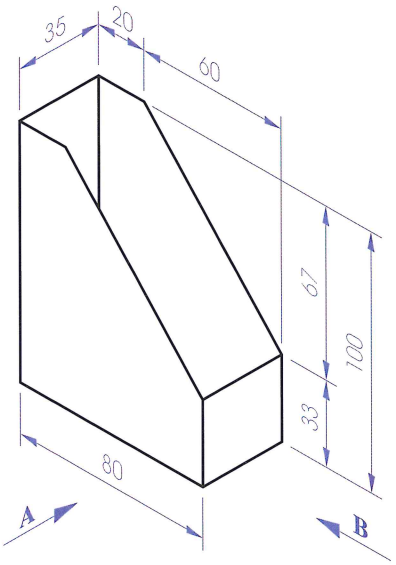

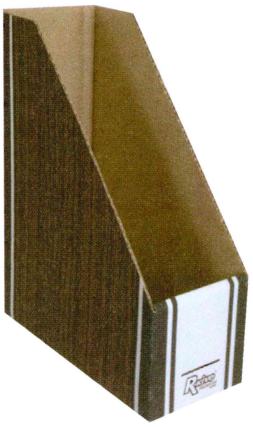

1. The figure below illustrates the faces of the truncated prism unfolding into one plane. The development consists of three rectangles and two trapeziums.

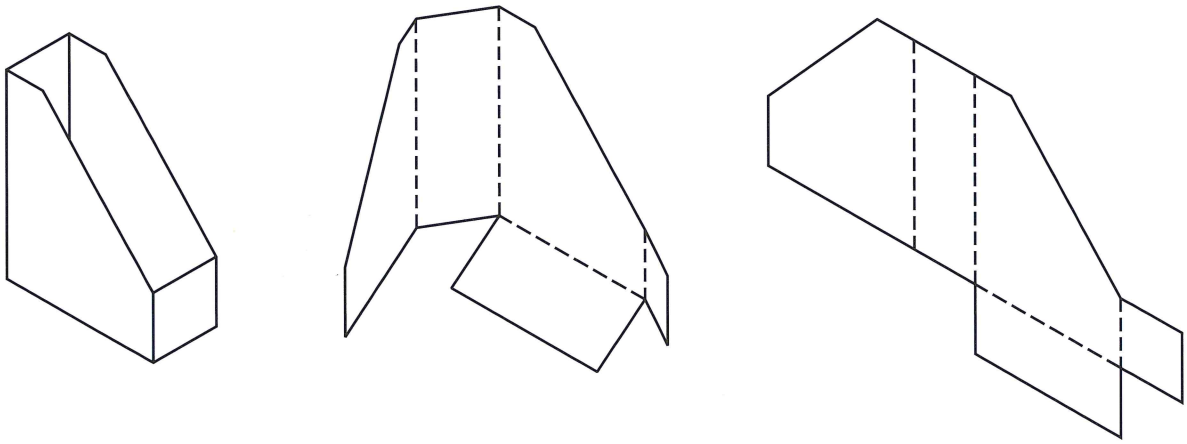

2. The front and end elevations are drawn as shown below.
3. The development can be drawn by transferring the relevant true lengths from the front and end elevations as shown below.

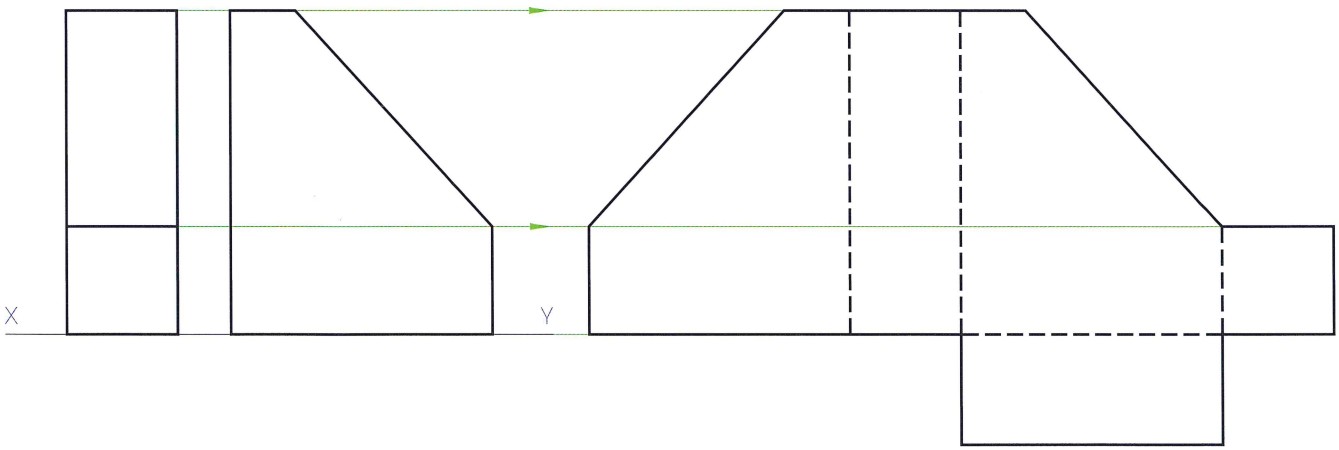

Exercises

1. A pictorial view of a **Disk Box** is shown over.

(a) Draw a **front elevation** of tl box looking in the direction of arrow **A**.

(b) Draw a **plan** looking in the direction of the arrow **B**, projected from the elevation.

(c) Draw a **development** of the box.

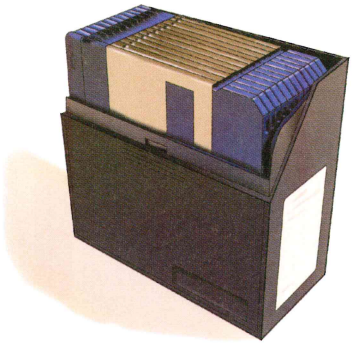

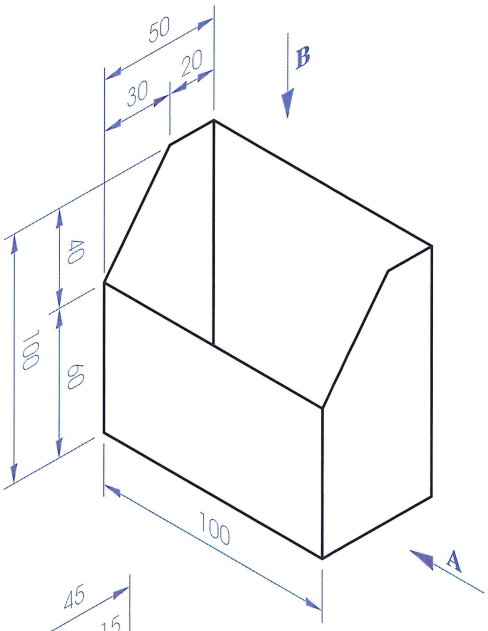

2. A pictorial view of a **Display Box**, a **Biro Box** and a **Litter Box** are shown. In each case:

(a) Draw a **front elevation** of the box looking in the direction of arrow **A**.

(b) Draw an **end elevation** looking in the direction of the arrow **B**.

(c) Draw a **development** of the box.

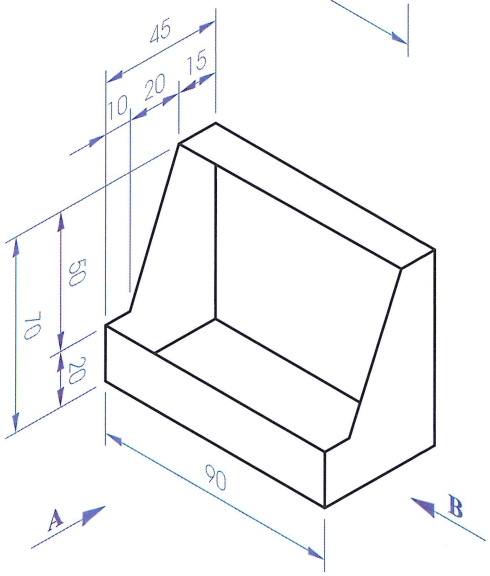

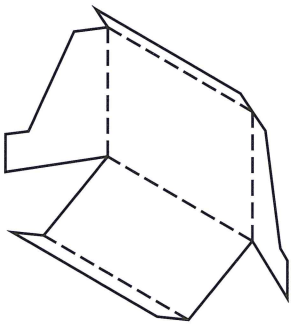

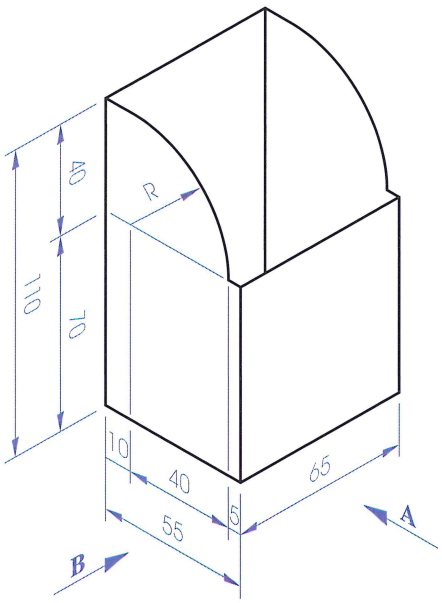

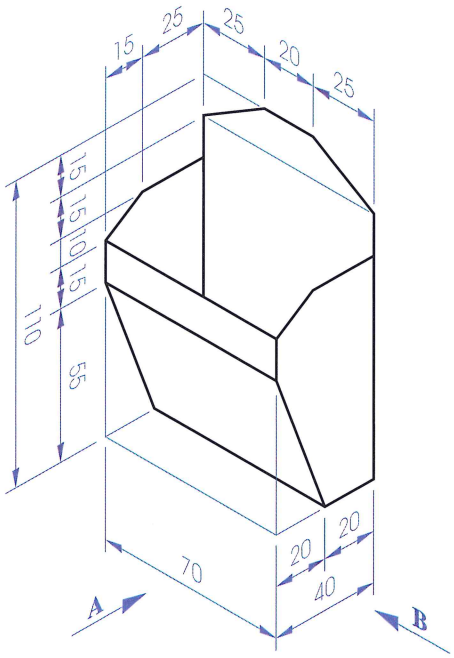

3. The figure over shows a pictorial view of a box for **Gillette Razor Blades**.

(a) Draw a **front elevation** of the box looking in the direction of arrow **A**.

(b) Draw an **end elevation** looking in the direction of the arrow **B**.

(c) Draw a **development** of the box.

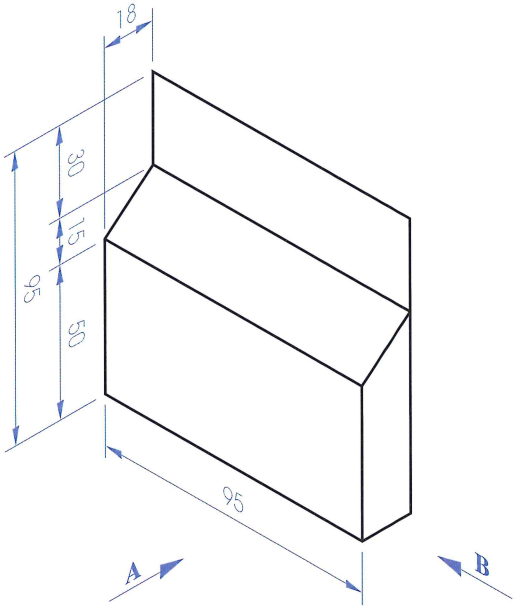

4. A pictorial view of a **Jewellery Box** is shown across.

(a) Draw a **front elevation** of the box looking in the direction of arrow **A**.

(b) Draw an **end elevation** looking in the direction of the arrow **B**.

(c) Draw a **surface development** of the box.

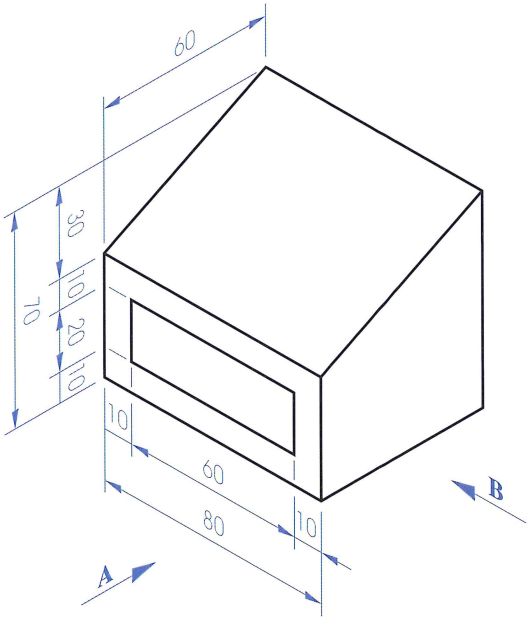

5. The figure below, right, shows a pictorial view of a box.

(a) Draw a **front elevation** of the box looking in the direction of arrow **A**.

(b) Draw an **end elevation** looking in the direction of the arrow **B**.

(c) Draw a complete **surface development** of the box.

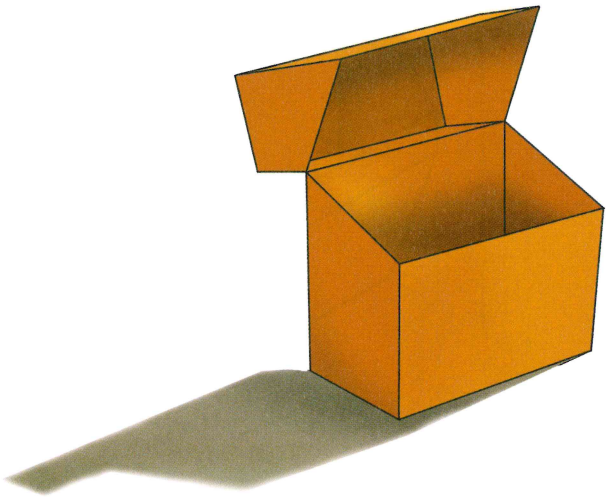

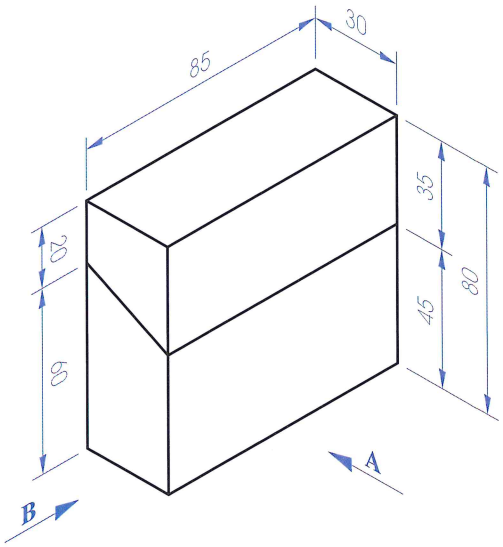

Example

The **Peaches Tin** shown is based on a **cylinder**. The plan and elevation of this cylinder are shown far right. Draw a **complete surface development** of the cylinder.

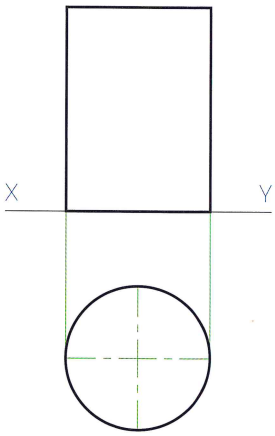

1. By observing, for example, some kitchen roll it is evident that *the curved surface of a cylinder unrolls into a rectangle.*

   The figure below illustrates the curved surface of a cylinder unrolling into a plane. The development has:
   - a length equal to the circumference of the top or bottom circle.
   - a height equal to the height of the cylinder.

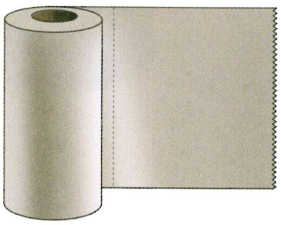

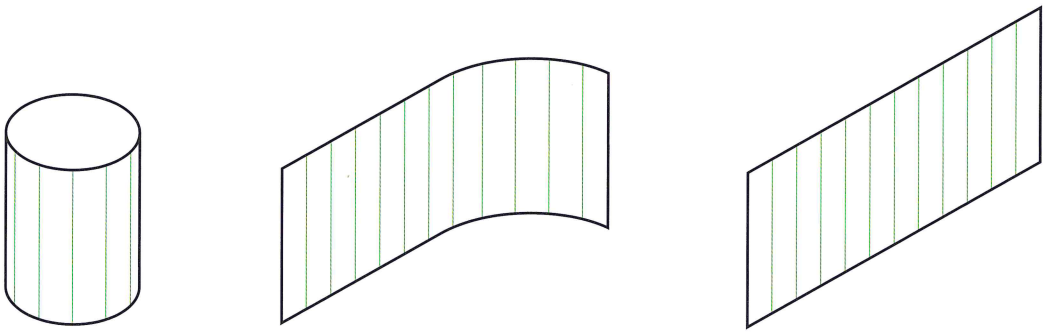

2. The development is constructed as shown below. The circumference of the circle can be approximated by dividing the circle into twelve equal parts and setting out the resulting cord distance twelve times.
3. The true shape of the top and bottom can be transferred directly from the plan.

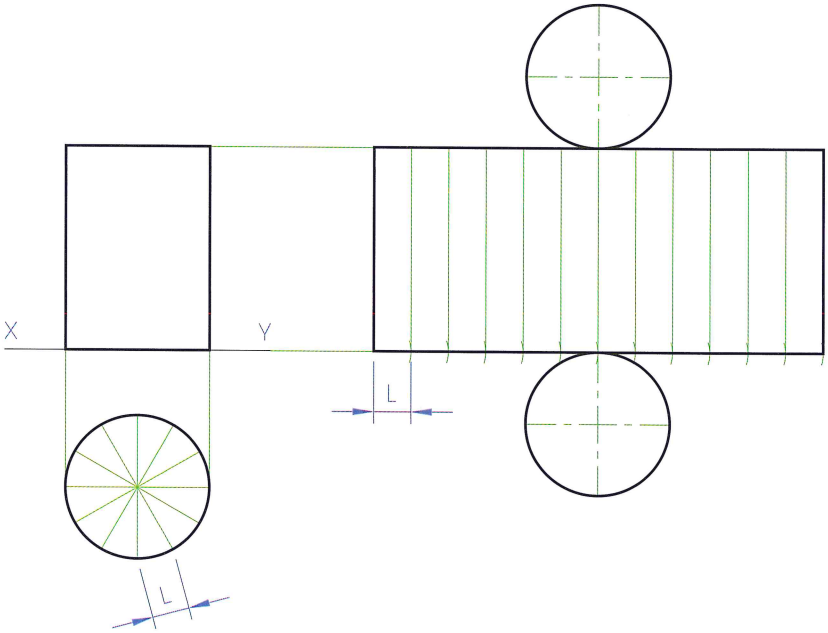

Exercises

1. The elevation and plan of a cylinder, which is based on the **Pringles** box are shown over.

(a) Draw the given views.

(b) Draw a **surface development** of the prism.

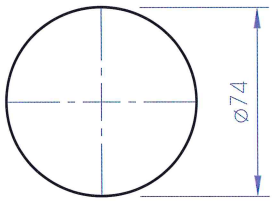

2. The figure over shows a pictorial view of a **bin**.

(a) Draw an **elevation** of the bin looking in the direction of arrow **A**.

(b) Draw a **plan** looking in the direction of the arrow **B**, projected from the elevation.

(c) Draw a **development** of the bin.

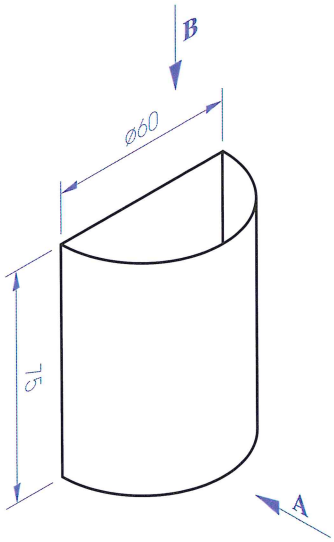

3. A pictorial view of a prism, which is based on the **Herring Fillets** box is shown below, right.

(a) Draw an **elevation** of the prism looking in the direction of arrow **A**.

(b) Draw a **plan** looking in the direction of the arrow **B**, projected from the elevation.

(c) Draw a **surface development** of the prism.

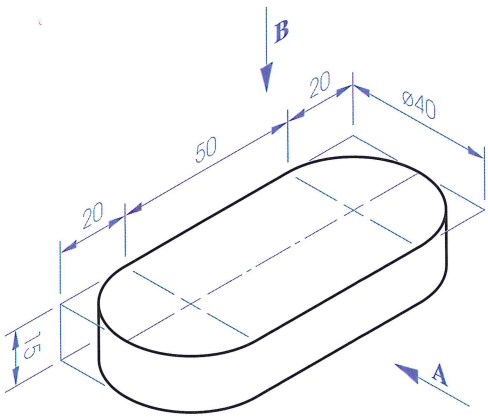

4. The figure over shows a pictorial view of a **container**.

(a) Draw an **elevation** of the container looking in the direction of arrow **A**.

(b) Draw an **end elevation** looking in the direction of the arrow **B**.

(c) Draw a **development** of the container.

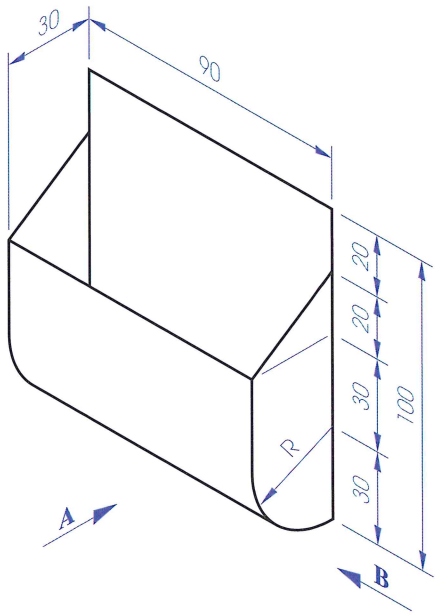

5. A pictorial view of a **Jewellery Box** is shown across.

(a) Draw an **elevation** of the box looking in the direction of arrow **A**.

(b) Draw an **end elevation** looking in the direction of the arrow **B**.

(c) Draw a **surface development** of the box.

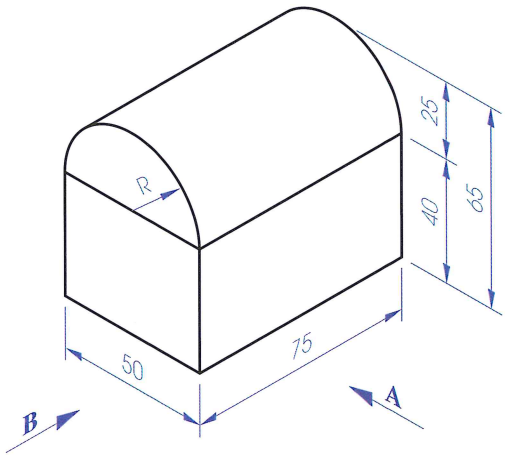

6. The figure over shows a pictorial view of a **box**.

(a) Draw an **elevation** of the box looking in the direction of arrow **A**.

(b) Draw an **end elevation** looking in the direction of the arrow **B**.

(c) Draw a **surface development** of the box.

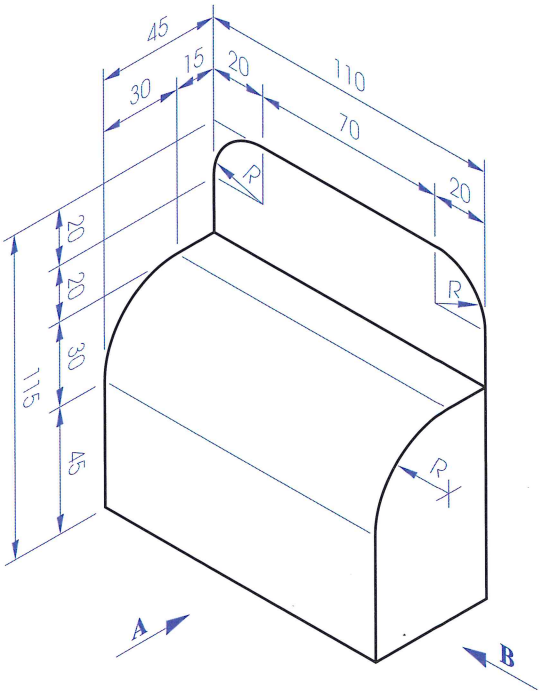

Chapter 11

Circles 1

A circle is a plane curve whose points are all the same distance from a fixed point called the **centre**.

Parts of a Circle

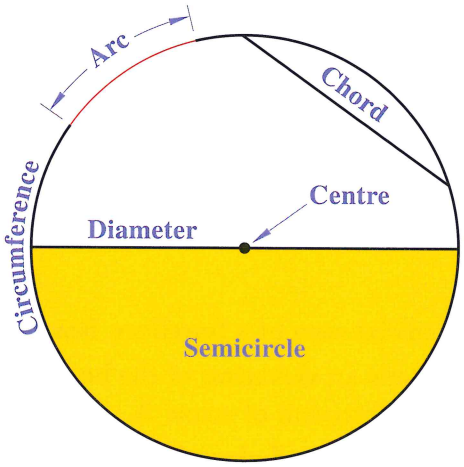

Circumference
The outline of the circle.

Arc
Any part of the circumference.

Chord
A straight line joining two points on the circumference.

Diameter
A chord that passes through the centre. The symbol for diameter is Ø.

Semicircle
Half of a circle.

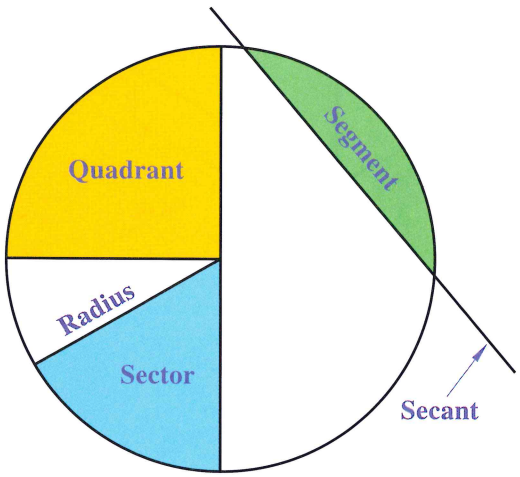

Quadrant
A quarter of a circle.

Segment
The part of a circle enclosed by a chord and its arc.

Radius
A line joining the centre to a point on the circumference. It is often abbreviated to **R**. The plural of radius is **radii**.

Sector
The part enclosed by two radii and an arc.

Secant
A line that intersects a circle at two points.

Concentric and Eccentric Circles

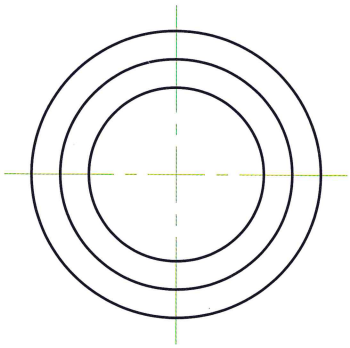

Concentric circles

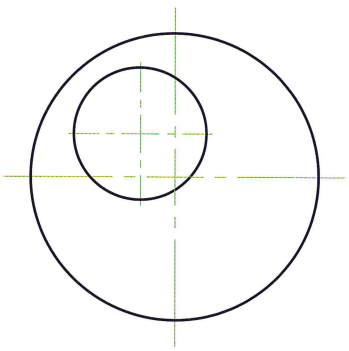

Eccentric circles

Concentric circles are circles that have the same centre but different radii.
Eccentric circles are circles that have different centres and different radii.